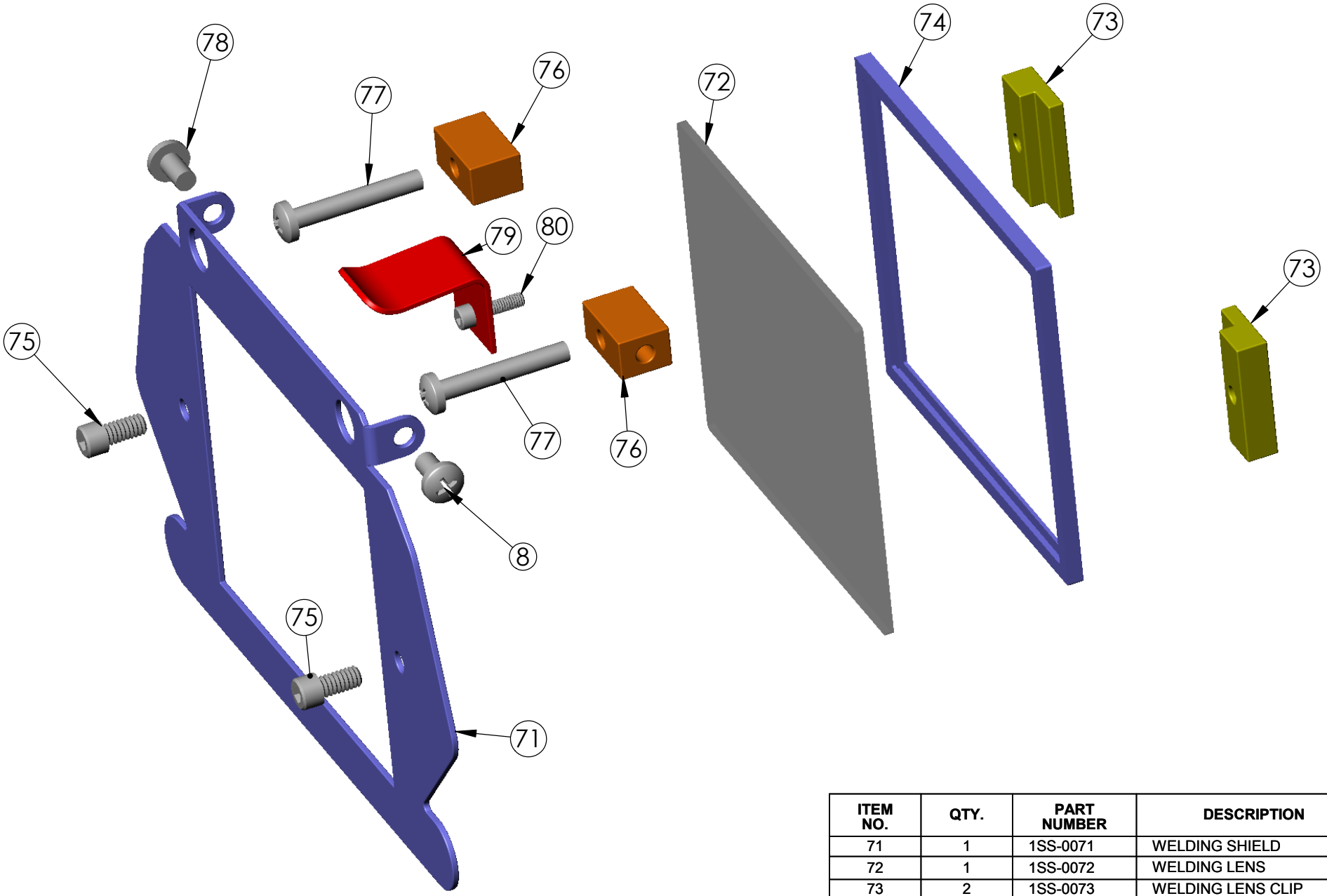

ITEM NO.	QTY.	PART NUMBER	DESCRIPTION
71	1	1SS-0071	WELDING SHIELD
72	1	1SS-0072	WELDING LENS
73	2	1SS-0073	WELDING LENS CLIP
74	1	1SS-0074	WELDING LENS GASKET
75	2	1SS-0075	SCREW
76	2	1SS-0076	WELDING SHIELD HINGE
77	2	1SS-0077	SCREW
78	2	1SS-0078	SCREW
79	1	1SS-0079	WELDING SHIELD SPRING
80	1	1SS-0080	SCREW

06/03/04

G2000SS, INC.

WELD SHIELD ACCESSORIES